transvac

ejector solutions

Flare Gas Recovery & Zero Flare Solutions

Time to change.

Traditionally, in the Oil & Gas industry, waste and surplus gas has been disposed of by flaring to atmosphere. Today this process is becoming increasingly unacceptable as the industry progresses towards eliminating the emission of greenhouse gases into the atmosphere, whilst simultaneously conserving energy.

Therefore, the demand for equipment that can safely and economically compress waste and surplus gas back into the production process is rapidly increasing.

Ejectors are ideally suited to this application because they employ either the available high-pressure gas or liquid energy to entrain and compress waste and surplus gas to a pressure where the gas can be recovered into production or used as fuel gas.

With no moving parts and requiring no maintenance, Ejectors are the only sensible choice.

Universal Design Flare Gas Ejector for PDO, Oman

Flare Gas Ejector to compress degassing drum gasses, manufactured in 6Mo for Statoil via Aibel, Norway

Flarejet

the zero-flare solution

Transvac's FlareJet™ solution is a complete, turnkey zero-flare solution for the oil & gas industry.

Providing up to 150:1 compression, FlareJet™ recovers waste gasses with ease and eliminates the need for flaring outside of emergency situations.

Using experience gained over 43 years and fine tuned in our state of the art R&D test facility, FlareJet™ offers the very latest in cutting-edge Ejector technology and performance.

Waste gasses are compressed and discharged at a specified pressure to suit required the downstream process. In most cases, recovered gas can be returned to production or is used as fuel gas on the facility.

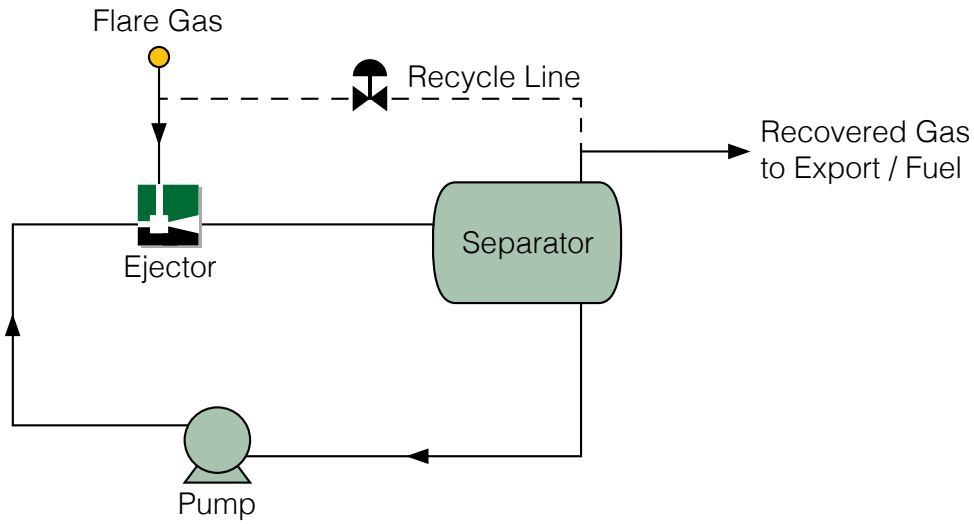

FlareJet™ does not interfere with local ESD procedures and is intended to recover gasses continually sent to flare, such as purge, separator and knock-out drum gasses.

Simple control philosophies cater for varying inlet (flare gas) flow rates and ensure upstream process is not affected.

With no moving parts, the FlareJet™ Ejector can handle both solids (such as sand) and sour gasses without issue. Special-grade ceramic internals are employed to resist abrasion and ensure reliability.

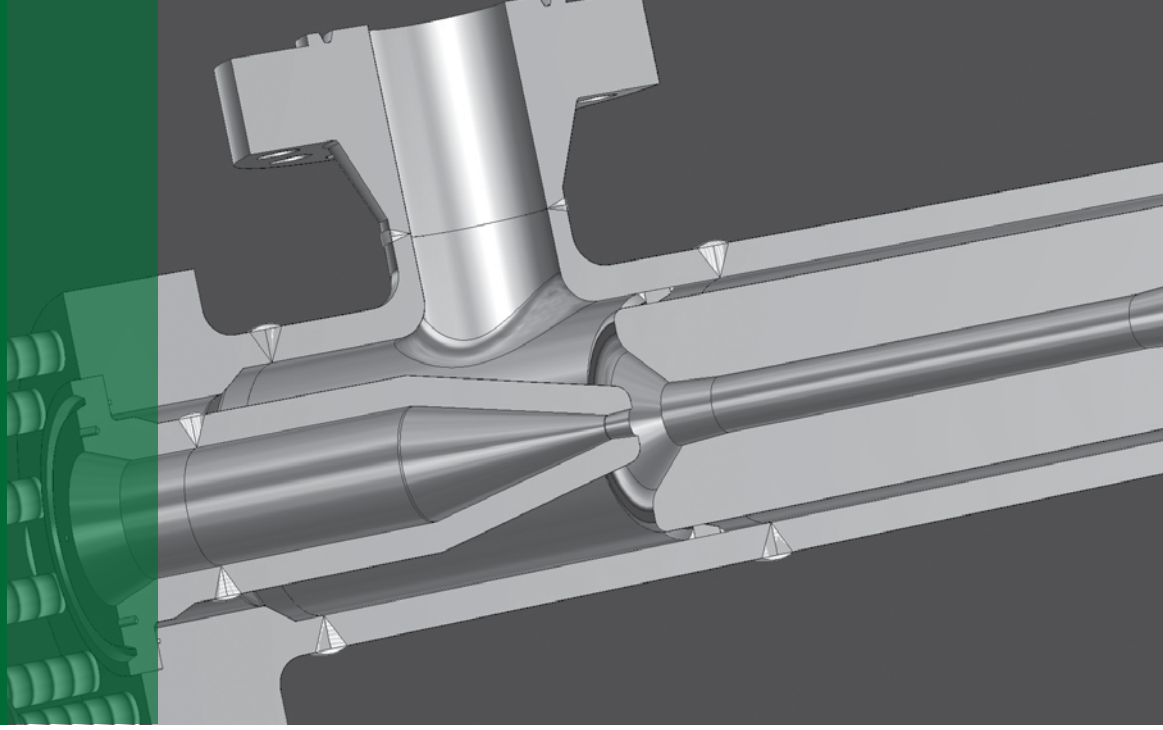

How Ejectors Work

Ejectors (also referred to as Surface Jet Pumps, Eductors or Venturi's) provide a simple, robust and reliable method of pumping and boosting the pressure of fluids.

The operation is based on Bernoulli's principle, whereby by increasing the velocity of a fluid as it passes through the nozzle, a low pressure region is created within the Ejector. This region entrains and compresses the secondary LP stream which we call the suction fluid. As the combined HP and LP streams pass through the Ejector's diffuser section, the velocity decreases and the pressure is regained, resulting in an intermediate pressure, which lies somewhere between the LP and HP inlet pressures.

> "Ejectors use a high pressure fluid to compress a low pressure fluid to an intermediate pressure.
>
> David Hoon, Director

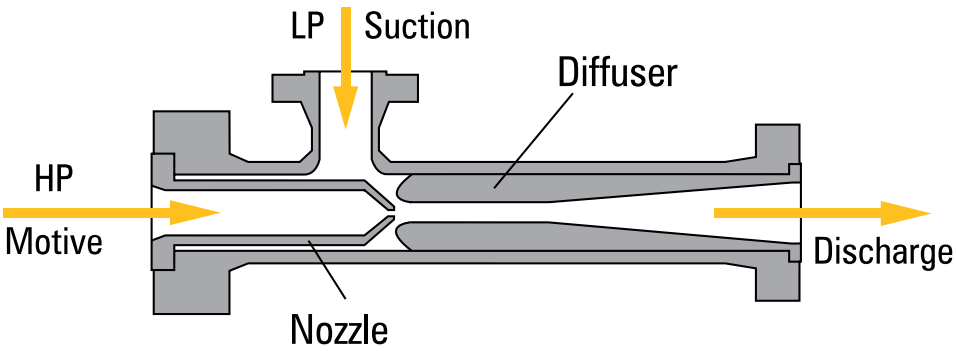

Why Choose Flare Gas Ejectors?

- Emission of greenhouse gases to atmosphere eliminated
- Waste gas compression of up to 150:1 in a single Ejector stage
- Potential reduction in tax liability
- Waste gas is recovered and added to production
- Often no running costs because existing energy can be used to power the Ejector
- Ejectors have no moving parts
- No maintenance (very attractive for remote installations)
- Simple to install as part of the existing pipework system
- Low cost option, significantly cheaper than alternative technologies
- Safe, reliable operation
- Performance easily modified to suit changing conditions with Transvac's patented 'Universal Design'
- Easy to control, using standard techniques
- Ejectors can be performance tested prior to despatch

Typical Ejector control options

It is not uncommon for the flow rate of flare gas to vary and, if not controlled, the suction pressure created by the Gas Ejector will also vary.

In order to maintain the desired flare gas operating pressure, a number of control strategies are available.

These include:-

- Recycling of gas from the discharge side of the Gas Ejector back into the suction (low pressure) side
- Incorporation of an integral HP gas regulating valve which varies the motive fluid consumed.

Flare Gas Ejector (complete with motive gas regulation) to recover condensate off-gas, for Conoco-Phillips, Indonesia

Super Duplex Flare Gas Ejector for Cairn, Offshore India

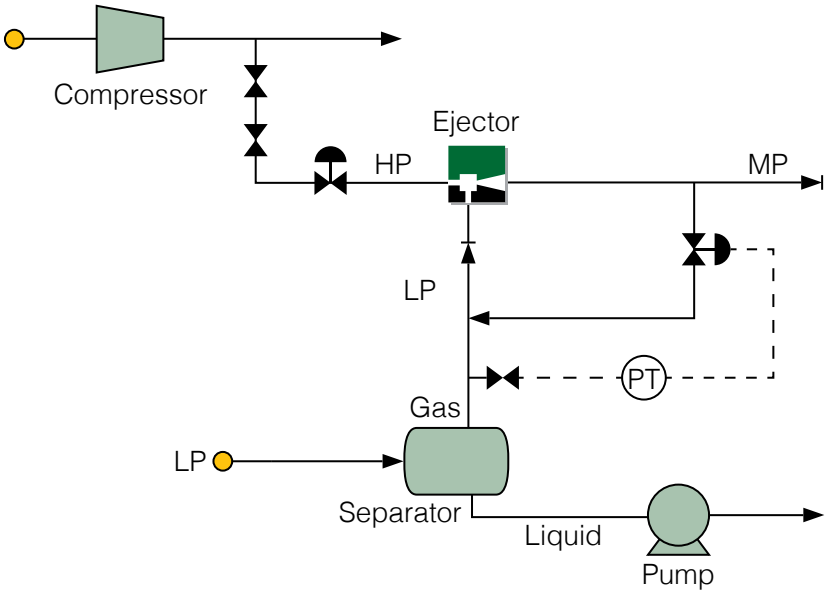

Driving your Ejectors

Ejectors operate with either a gas or a liquid as the high pressure motive fluid. In many cases, only a small compression is required to facilitate waste gas re-entry into the production process. Most commonly, this is re-enters the process as fuel gas, is sent to export, or is used as injection/lift gas.

Gas motivated Ejectors offer a compression of 7:1 in a single stage. This can be further boosted with the use of a secondary Ejector shown on the next page.
Liquid driven Ejectors offer compressions of up to 150:1. Where water is used to drive an Ejector, facilities can often provide available separator capacity to handle the discharge water.

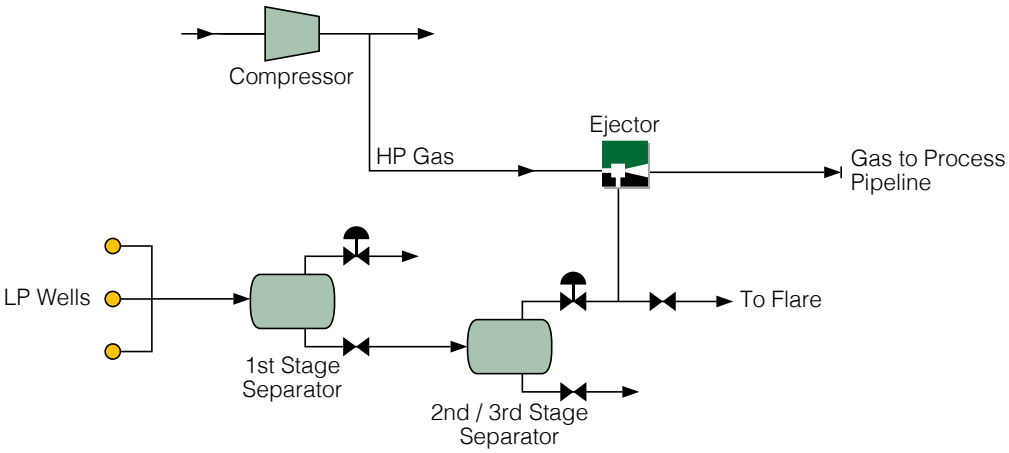

Typical schematic for gas driven Ejector, using HP gas from a compressor discharge.

In many cases, the recovery of gas from a separator results in a boost in production from the upstream manifold. The reduction in backpressure from the separator allows wells to flow more easily.

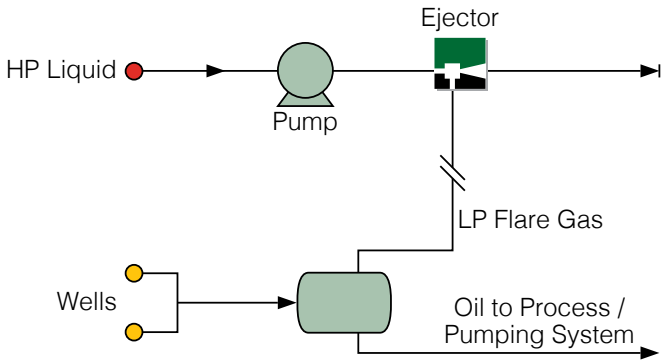

Typical schematic for liquid driven Ejector.

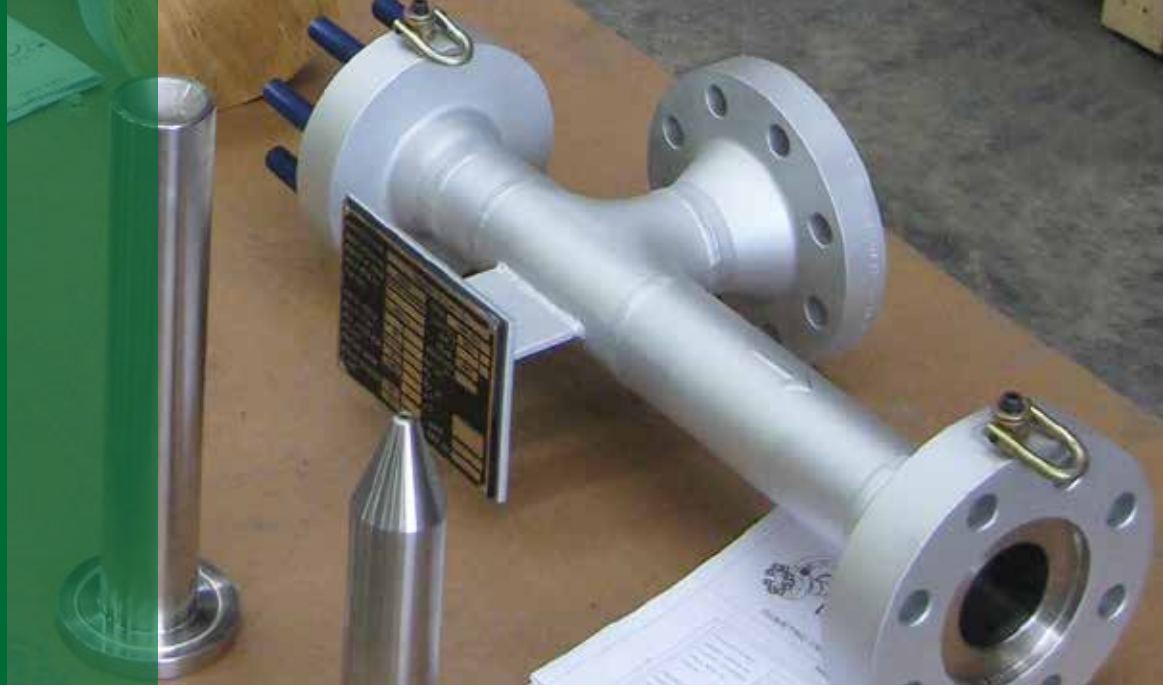

Multi-Ejector Solutions

If the required compressions ratio (discharge pressure / LP pressure) is too high to achieve in a single Ejector, then they can be connected in series to achieve the required discharge pressure. The total flow from the first stage Ejector becomes the LP flow for the 2nd stage Ejector. The consideration with this approach, however, is that the second Ejector may require a higher motive pressure or flow rate.

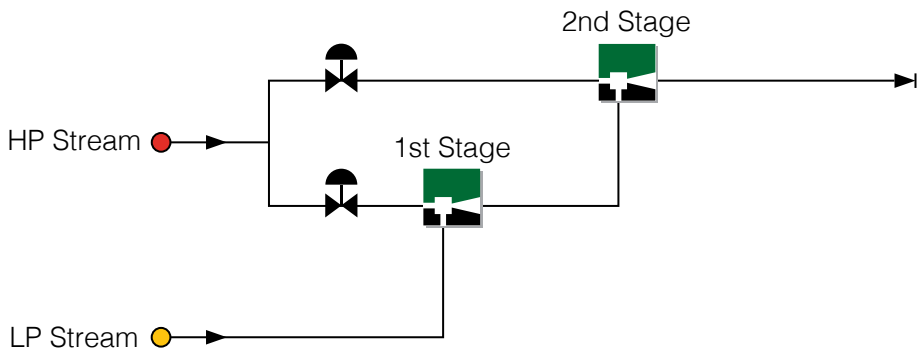

Where high turndown is expected on the LP (flare gas) flow rate, Ejectors can be placed in parallel. This allows switching one Ejector on or off, depending on the duty demand, thereby allowing motive gas to be saved. This is important in some applications, particularly where HP fluid usage has an associated cost. In some applications, more than two Ejectors have been used in parallel.

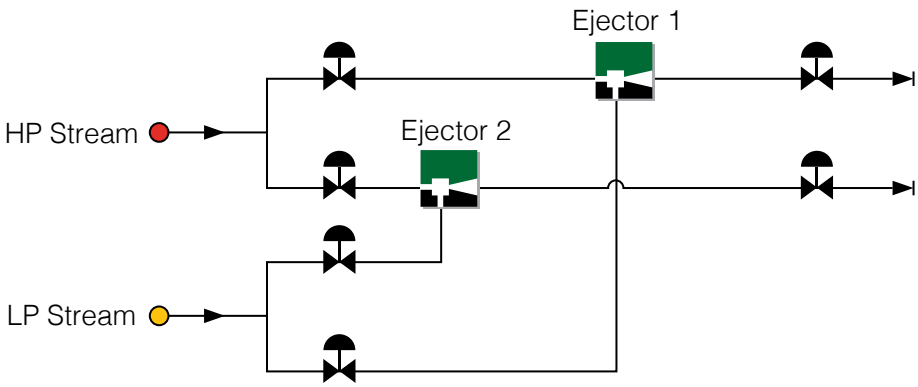

Compressor replacement & flare gas recovery

Ejectors can be used to completely replace existing mechanical compressors. With no maintenance and utilising available energy, this approach can often be justified on lower CAPEX and OPEX alone.

In this example, high pressure gas from the 2nd stage separator is used to power the Ejector, boosting the pressure of the 1st stage separator gas. The Ejector discharges at the required inlet pressure for the 2nd stage compressor, thus completely eliminating the need for the expensive mechanical 1st stage compressor.

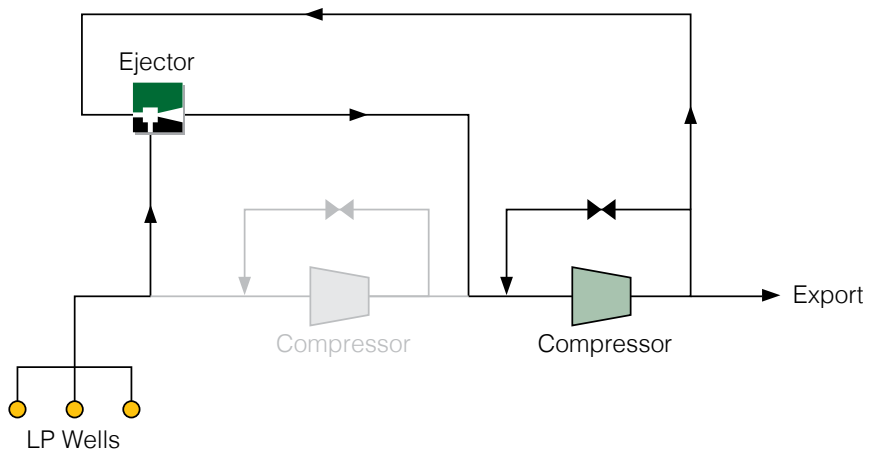

Benefits

- Flare Gas of 2 MMscfd at 1bara captured and delivered at the suction pressure of 2nd stage compressor.
- Used energy that was already available.
- 1st stage compressor was removed from service. It simplified system operation and reduced maintenance costs.
- Gas no longer burned to power this compressor.

Gas Ejector used to replace 1st stage Mechanical Compressor

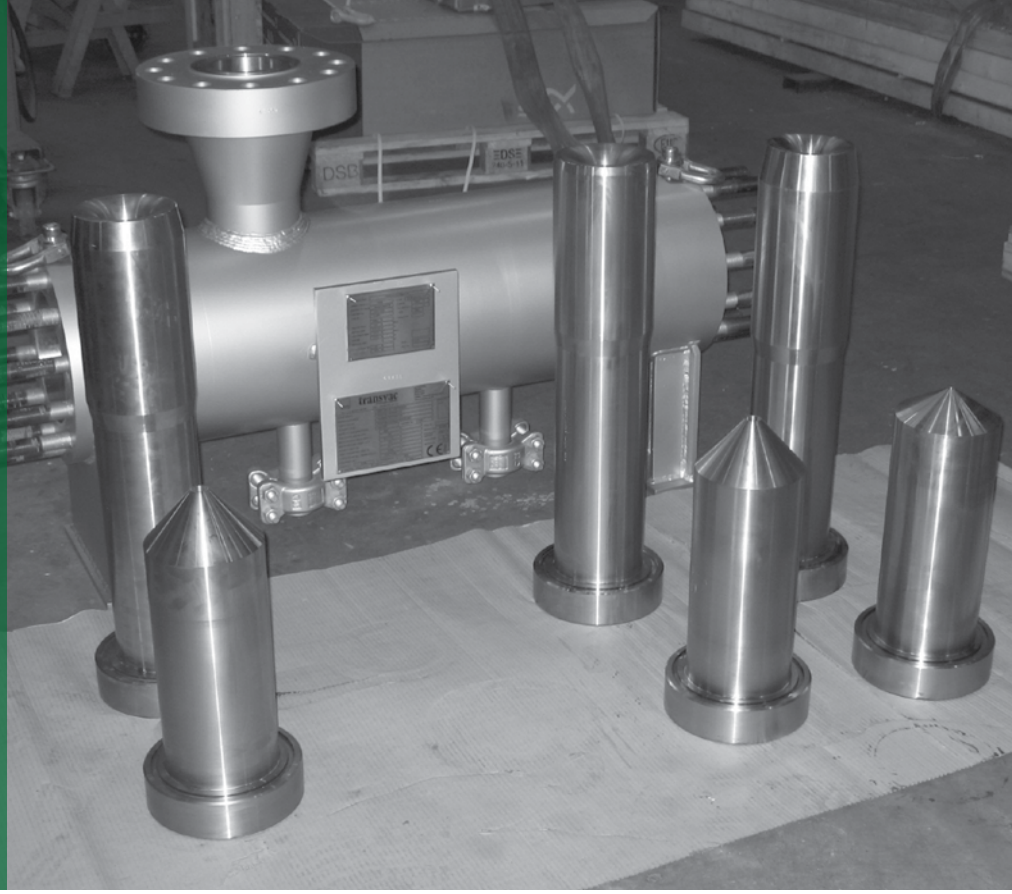

The Transvac 'Universal Design'

We understand that production is not always predictable. Conditions change over time and facilities need to be able to deal with this.

Ejectors are fixed-design devices. Each of our Ejectors are custom designed to perform at specific operating conditions. That's why we invented our patented 'Universal Design' Ejector.

The patented Universal Design (UD) comprises an external pressure retaining shell into which are fitted two replaceable components which give the Ejector its operating characteristics. These two components are called the nozzle and the diffuser and in the Universal Design, they can be easily changed-out with different ones in order to give the Ejector different optimum operating characteristics.

Thus, if flaring conditions change over time, the internals can be replaced with new ones which are more suited to the new conditions.

By changing-out the internals at recommended intervals, high performance efficiency can be maintained over the lifetime of the unit.

'Universal Design' nozzle and diffuser sections designed to allow the Ejector to operate at new production conditions

Why do I need Universal Design?

- For instances where operating conditions may change gradually over time. (e.g. declining separator throughput)
- UD pressure retaining shell can be sized to suit future operating conditions
- UD Nozzle and Diffuser internals easily changed-out to suit different operating conditions
- UD pressure retaining shell can be manufactured before operating conditions have been confirmed
- Manufacture of UD Nozzle & Diffuser can be delayed until the last few weeks of contract, when operating conditions are confirmed
- Change-out of the new UD internals can be completed in one day
- Less risk to project if predicted operating conditions are found to be wrong, because new internals can be made relatively quickly and with no changes to associated pipework
- Easier to realise short-term well opportunities with UD design approach
- Without internals fitted, pressure retaining shell simply behaves as a piece of pipework
- Potential to relocate UD to a new site with different operating conditions and different internals


transvac

> “we are focused on turning innovative designs into proven solutions.

- Gary Short, Design & Innovation Director

R&D Test Facility

Transvac officially opened its R&D Test facility in April 2010. The state-of-the-art test facility primarily develops new oil & gas Ejector technology for subsea processing, flare gas recovery, sand slurry pumping and enhanced recovery & production solutions.

Ejector applications for the nuclear, bio-fuel, chemical and wastewater industries are also under development.

The R&D test facility includes high and low pressure equipment for handling water, oil, gas, multi-phase and slurry. Test programmes are supported by CFD studies and include fundamental University research.

The Transvac facilities include liquid flow lines for high, medium & low pressure testing (in excess of 250 barg) and solids handling systems.

The FlareJet zero-flare solution was developed here, offering gas compression of up to 150:1 with a liquid driven Ejector.

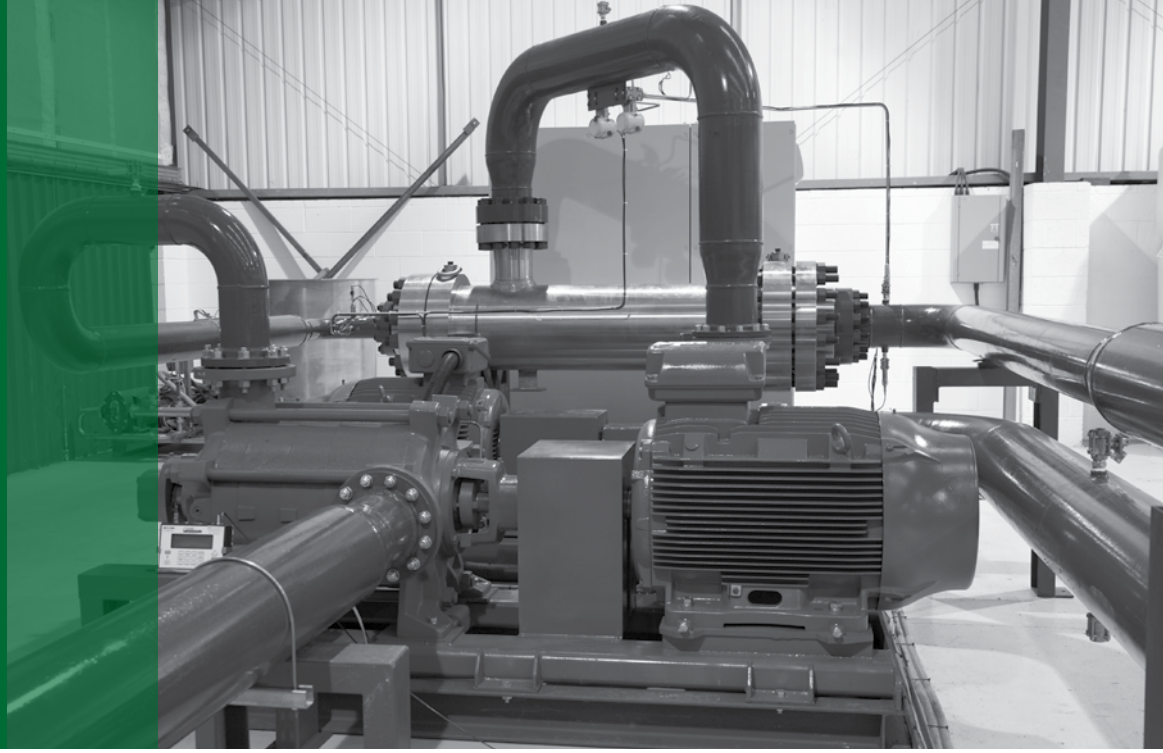

Test Facilities

- 9 x flow loops
- 9 x VSD water pumps
- Pump pressure up to 300 bar
- Liquid flows up to 700 m^3/h
- Sand slurry flows up to 60 m^3/h [up to 60% SVF]
- Nitrogen 320 barg @ 200 kg/h
- Instrument Air 12.5 barg @ 70 Am^3/h
- 400 KvA stand alone generator
- Stainless Steel Test Rig - 60 m^3/h up to 25 barg feed
- 2 x 9 m^3 clean water tanks
- 1 x 35 m^3 slurry / water tank
- 1 x 6 m^3 calibrated weigh tank
- 7 x coriolis meters (liquid / gas) 1/2" to 4", 5 to 150,000 kg/h
- 1 x 16m^3 27.5 barg pressure vessel for closed loop multi-phase testing
- High pressure in-line solids / phase separator [150 barg and 100 m^3/h]
- Fully automatic control and data acquisition system using ASi field bus system (LabView)
- Flow assurance : flow accuracy 0.1 - <1.0 % FS / Pressure Accuracy 0.1% or better

About Us

Transvac Systems Limited is a privately owned Ejector Solutions provider formed in 1973.

As both a designer and a manufacturer of Ejectors, Transvac has full in-house control over process and mechanical design, supply of raw materials, manufacturing, scheduling and testing. With all of our procedures certified to BS EN ISO 9001:2015 the quality of the final product is assured.

Transvac is accredited to Module H of the Pressure Equipment Directive (PED) and our products are CE marked where appropriate. We are also 1st Point Assessment (FPAL) and Achilles registered.

All products are custom designed to suit the process and mechanical requirements of each application to ensure maximum operating efficiency.

Transvac offers standard and exotic materials of construction including Hastelloy, Duplex, Super Duplex, Titanium, 6MO etc.

Transvac Systems Ltd., Monsal House, 1 Bramble Way, Alfreton, Derbyshire, DE55 4RH, UK
Tel: +44 (0) 1773 831100 | **Email:** sales@transvac.co.uk | **Web:** www.transvac.co.uk

Registered in England No. 1526398